Elements & Macromolecules in Organisms

The most common elements in living things are **carbon, hydrogen, nitrogen, and oxygen**. These four elements constitute about **95% of your body weight.** All compounds can be classified in two broad categories --- **organic and inorganic compounds**. Organic compounds are made primarily of **carbon**. Carbon has **four outer electrons** and can form four bonds. Carbon can form **single** bonds with another atom and also bond to other carbon molecules forming **double** and **triple bonds**. Organic compounds also contain **hydrogen**. Since hydrogen has only one electron, it can only form **single bonds**.

Each small organic molecule can be a unit of a large organic molecule called a **macromolecule.** There are **four classes of macromolecules** (polysaccharides or **carbohydrates**, triglycerides or **lipids**, polypeptides or **proteins**, and **nucleic acids** such as DNA & RNA). **Carbohydrates and lipids** are made of only carbon, hydrogen, and oxygen **(CHO**). **Proteins** are made of carbon, hydrogen, oxygen, and nitrogen **(CHON). Nucleic acids** such as DNA and RNA contain carbon, hydrogen, oxygen, nitrogen, and phosphorus **(CHONP).**

The body also needs trace amounts of other elements such as calcium, sodium, potassium, and sulfur for proper functioning of muscles, nerves, etc. **Color** each of the **elements on the back of this page** according to the color listed next to the element's symbol. Then **Color code** the **squirrel** with the correct proportion of each element's color. Now ***color code*** the carrot with the same colors as you used on the squirrel keeping in mind the relative proportions of each element.

The four main classes of organic compounds **(carbohydrates, lipids, proteins, and nucleic acids)** that are essential to the proper functioning of all living things are known as **polymers or macromolecules.** All of these compounds are built primarily of **carbon, hydrogen, and oxygen** but in different ratios. This gives each compound different properties.

Directions: Highlight in the reading the answer to each question and write the number of the question above the highlighted answer. Write the answers to the questions in the space below the questions.

1. Name the 4 main elements that make up 95% of an organism.
2. Name the 3 types of bonds carbon can form.
3. What are macromolecules?
4. Name the 4 classes of macromolecules.
5. Give 2 examples of nucleic acids.
6. What elements make up carbohydrates & lipids (symbols)?
7. Name 3 elements your body needs trace amounts of for proper functioning.
8. Macromolecules are also known as _____.
9. If all the macromolecules are made mainly of the elements **CHO,** how are they different?

Answers GO Here…

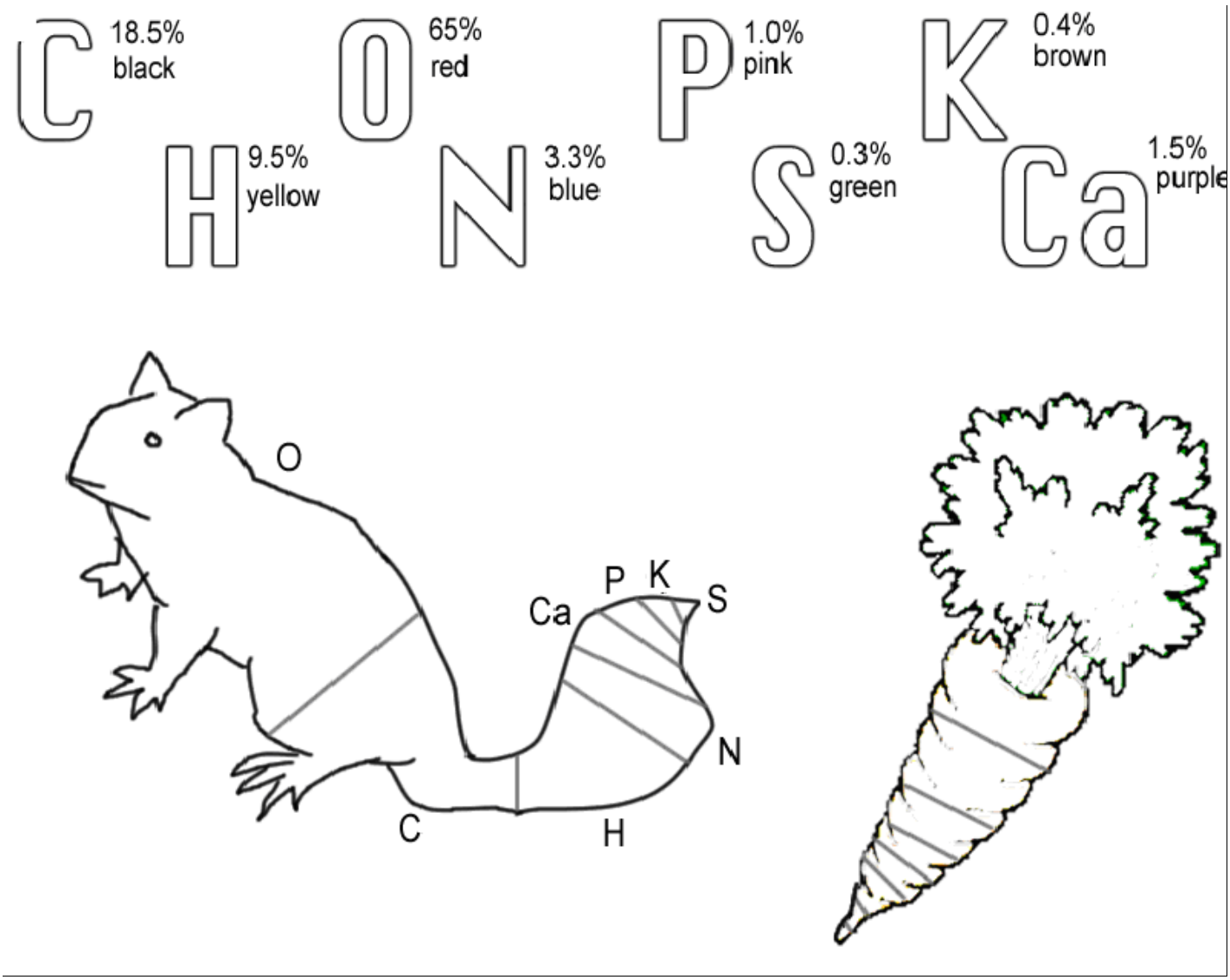
C 18.5% black
O 65% red
P 1.0% pink
K 0.4% brown
H 9.5% yellow
N 3.3% blue
S 0.3% green
Ca 1.5% purple
O
Ca
P
K
S
N
C
H

Carbohydrates

Carbohydrates are used by the body for **energy** and **structural support** in cell walls of plants and exoskeletons of insects and crustaceans. They are made of smaller subunits or monomers called **monosaccharides**. Monosaccharides have carbon, hydrogen, and oxygen in a **1:2:1 ratio**. Monosaccharides or **simple sugars** include **glucose, galactose, and fructose**. Although their chemical formulas are the same, they have **different structural formulas.** These simple sugars combine to make **disaccharides** (double sugars like sucrose) and **polysaccharides** (long chains like cellulose, chitin, and glycogen). **Color code** the glucose molecule on this worksheet (carbon-gray, hydrogen-yellow, and oxygen-red).

Glucose Molecule

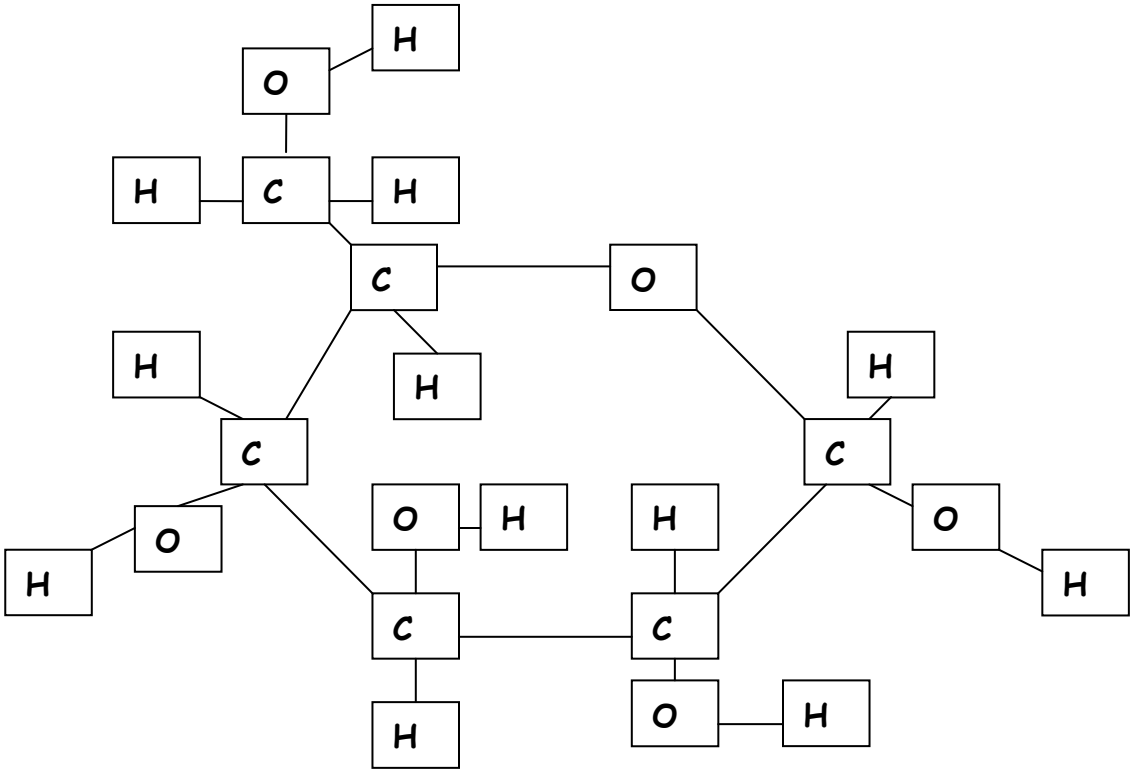

1. **Use the diagram of glucose** to tell how many carbon, hydrogen, and oxygen atoms are in a single molecule.
   #C _____ # H _____ # O _____
2. Write the chemical formula for glucose**.**
3. Name 2 ways your body uses carbohydrates**.**
4. What are the monomers called that make up carbohydrates?
5. What is the ratio of C, H, and O in monosaccharides?
6. Name 3 monosaccharides.
7. Monosaccharides are _____ sugars.
8. What are disaccharides & give an example?
9. Long chains of sugars are _____. Name three.

Answers GO Here…

Proteins

Proteins are made of **monomers** (repeating subunits) called **amino acids** and are used to build cells and do much of the work inside organisms. They also act as **enzymes** helping to control metabolic reactions in organisms. Amino acids contain two **functional groups**, the **carboxyl group (-COOH)** and the **amino group (-NH_2).**

Color code the amino acid below (carbon-gray, hydrogen-yellow, nitrogen-blue, and oxygen-red).

Basic Structure of Amino acid

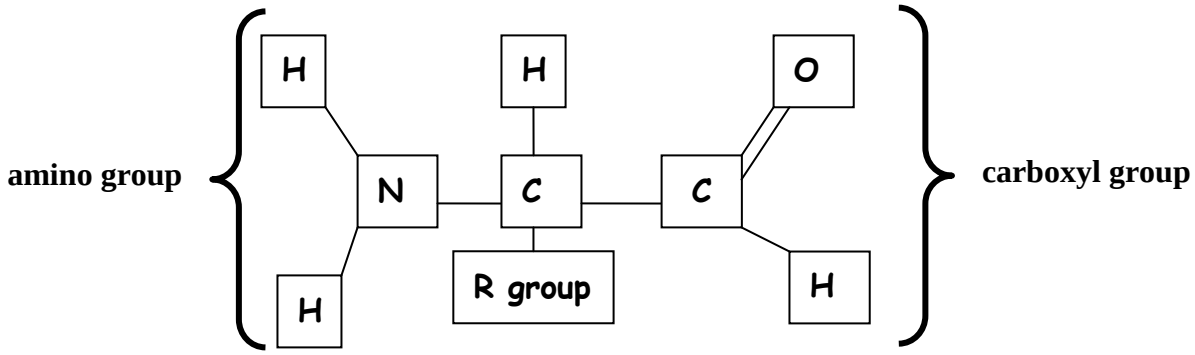

Enzymes are protein molecules that act as **biological catalysts**. A catalyst speeds up chemical reactions without being used up in chemical reactions. Cells contain **thousands** of different enzymes to control the functions of the cell. Enzymes must physically fit a specific **substrate(s)** to work properly. Substrates are the reactants in chemical reactions. The place where a substrate fits an enzyme to be catalyzed is called the **active site**. **Changes in temperature and changes in pH from neutral** can change the shape of enzymes and their active sites so the enzyme is unable to work. ***Color*** the enzyme purple, the substrates yellow, and the active site red.

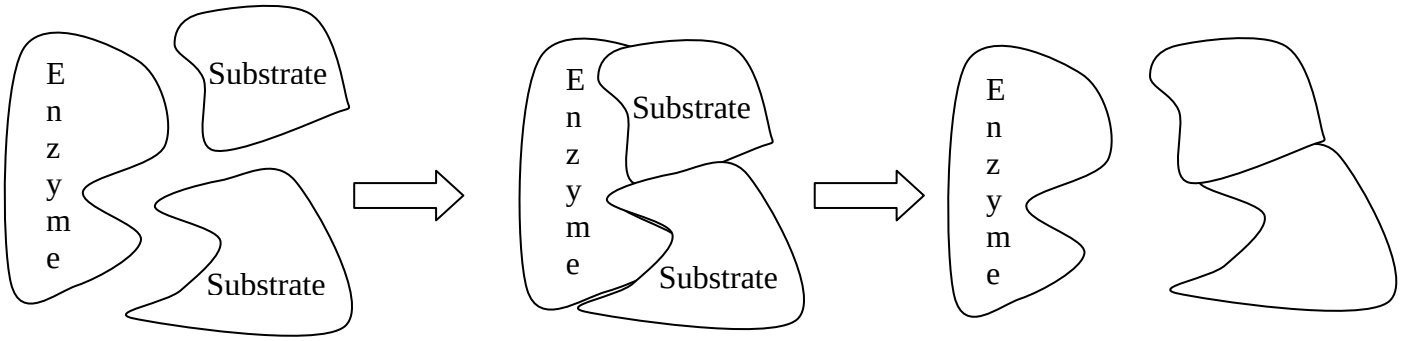

(Reactants) **(Product)**

Questions:

1. What monomers make up proteins?
2. Proteins also act as _____ in cells to control reactions.
3. Name the 2 functional groups in amino acids.
4. Sketch the 2 functional groups in amino acids and label each.
5. Cells have _____ of enzymes to act as biological _____.
6. Enzymes have an attachment site called the _____ site for the _____ to join.
7. What is the effect of excess heat or temperature on an enzyme?

Answers GO Here…

Lipids

Lipids are large, **nonpolar** (won't dissolve in water) molecules. **Phospholipids** make up cell membranes. Lipids also serve as waxy coverings **(cuticle)** on plants, **pigments** (chlorophyll), and **steroids**. Lipids have **more carbon and hydrogen atoms** than oxygen atoms. Some lipids are made of a **glycerol** (alcohol) and **three fatty acid chains**. This subunit is called a **triglyceride**. ***Color*** the glycerol molecule using the color code carbon-gray, hydrogen-yellow, and oxygen-red.

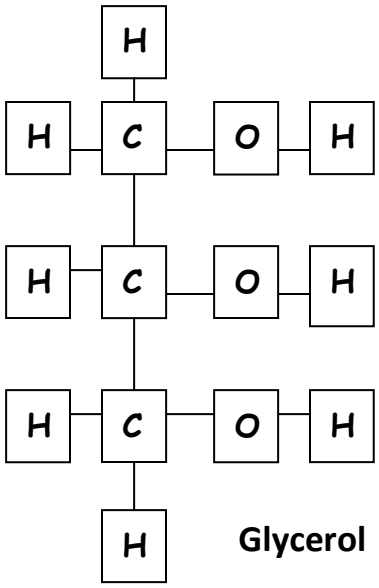

Glycerol

The fatty acid chains may be **saturated** (only single bonds between carbons) or **unsaturated** (contain at least one double bond). A **carboxyl functional group** (-COOH) is found on the end of the fatty acid that does NOT attach to glycerol. **CIRCLE AND LABEL** the carboxyl groups in the 2 fatty acids below. **Color** the fatty acid chains the same colors for carbon, hydrogen, and oxygen as you did before.

Saturated fatty Acid (all single bonds between Carbon atoms)

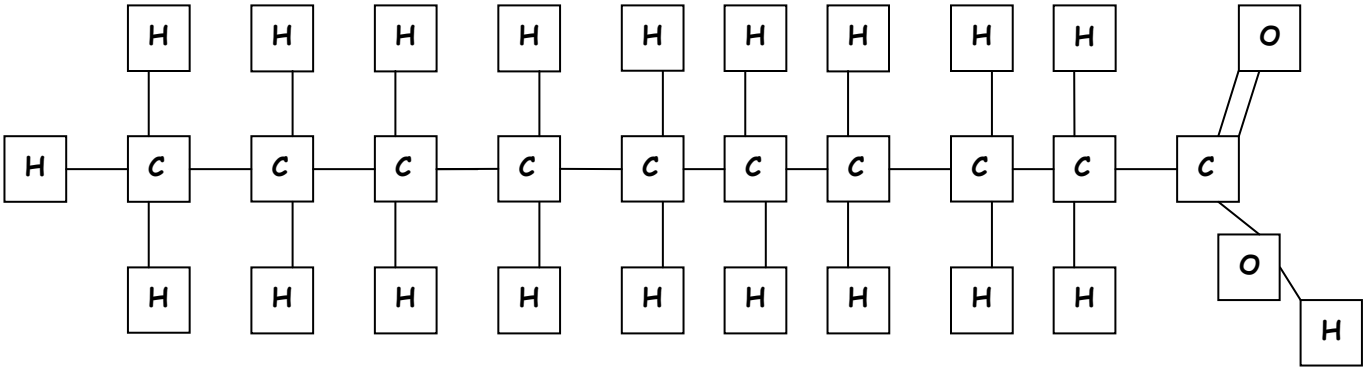

Unsaturated Fatty Acid – (at least one Double Bond between Carbon atoms)

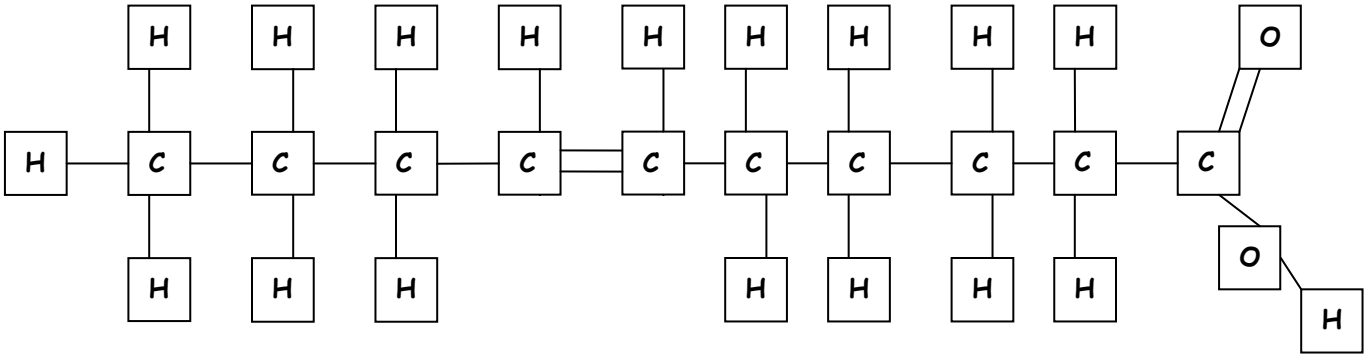

A special type of lipid called phospholipids help make up the cell membrane. Two layers of these phospholipids make up the membrane. Phospholipids have a "water-loving" hydrophilic head and two "water-fearing" hydrophobic tails. **Look** at the cell membrane below and **CIRCLE AND LABEL** a phospholipid using the terms hydrophilic head and hydrophobic tails. Proteins are also embedded in the cell membrane. **Color** the two proteins in the cell membrane **blue**.

Cell Membrane

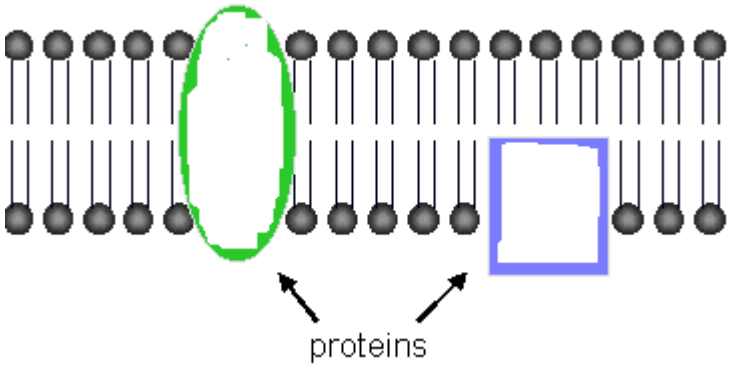

Questions:

1. Lipids are nonpolar. What does this mean?
2. _____ makes up cell membranes.
3. Name a waxy lipid covering plants.
4. Plant pigments like _____ are also _____.
5. Lipids have more _____ and _____ than they do oxygen atoms.
6. Fats are made of an alcohol called _____ and three _____ _____ chains. This is known as a _____.
7. If there are all SINGLE bonds between _____ in the fatty acid chain, then it is said to be _____.
8. If there is a DOUBLE bond between _____ in the fatty acid chain, then it is said to be _____.
9. The end of the fatty acid that does NOT attach to glycerol has what functional group? Write the formula for this group.
10. _____ layers of _____ make up the cell membrane.
11. The head of a phospholipid _____ water and is said to be _____.
12. The 2 tails of a phospholipid _____ water and is said to be _____.

Answers GO Here…

Nucleic Acids

Nucleic acids carry the genetic information in a cell. **DNA or deoxyribonucleic acid** contains all the instructions for making every protein needed by a living thing. **RNA or ribonucleic acid** copies and transfers this genetic information so that proteins can be made. The **monomers** (repeating subunits) that make up nucleic acids are called **nucleotides**. **COLOR AND LABEL** the parts of a nucleotide --- **sugar (5-sided**)-green, **phosphate group** (**round**)-orange, and **nitrogen base** (**6-sided**)-blue.

Nucleotide

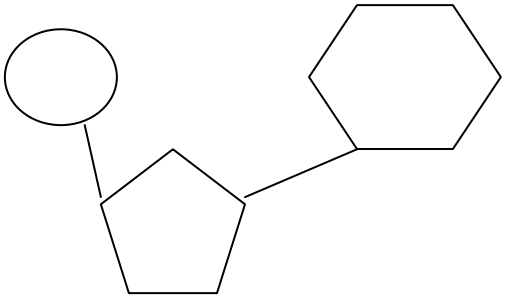

Questions:

1. Nucleic acids carry _____ information in a molecule called _____ or _____ acid.
2. DNA has the instructions for making a cell's _____.
3. The nucleic acid _____ copies DNA so _____ can be made.
4. _____ are the monomers making up nucleic acid.
5. The 3 parts of a nucleotide are a 5 carbon _____, a phosphate, and a nitrogen _____.

Answers GO Here…

Final Questions: (*<u>Answer on the back</u>*)

1. Give the symbols for the elements that make up each of the following:
   a. Carbohydrates
   b. DNA
   c. Lipids
   d. Proteins
2. Name the 4 classes of macromolecules & give a function for each.
3. Name the monomers (repeating subunits) that make up each of the macromolecules.
4. Enzymes can be denatured (unfolded) by what two environmental factors?
5. Why are enzymes important to organisms?
6. What is the difference between a saturated and unsaturated fatty acid?